TWO-STROKE ENGINE

Functionally mated Solidworks assembly, modeled from dimensioned drawings.

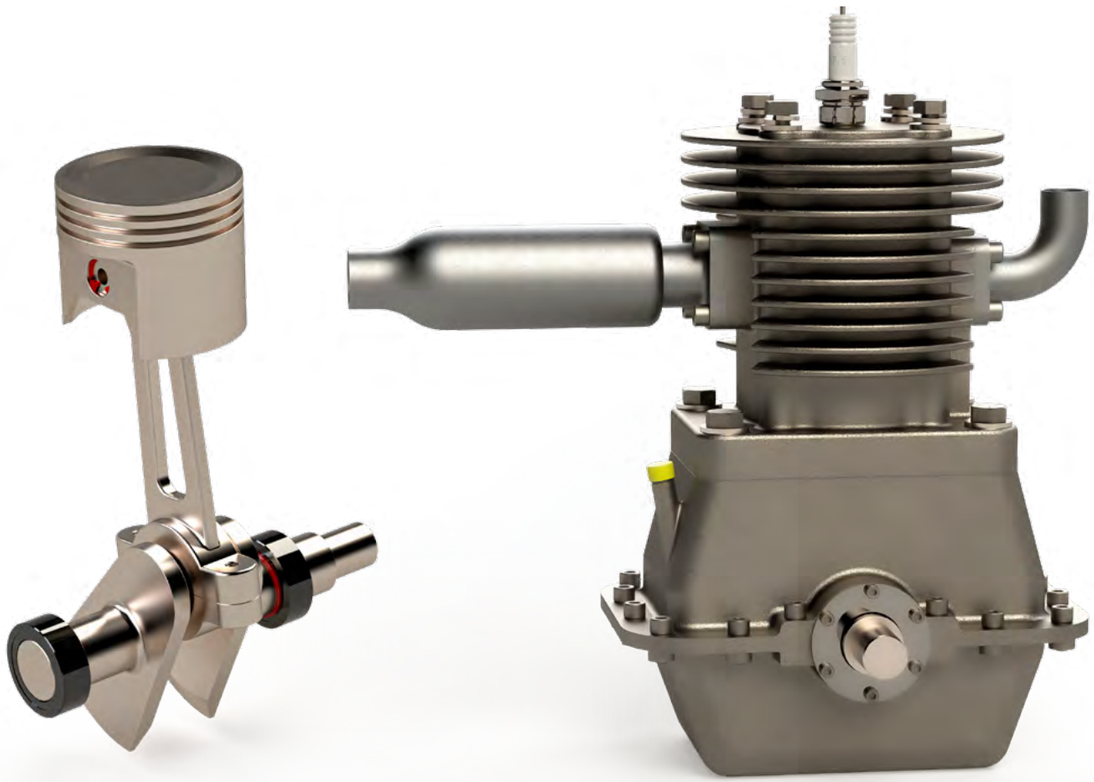

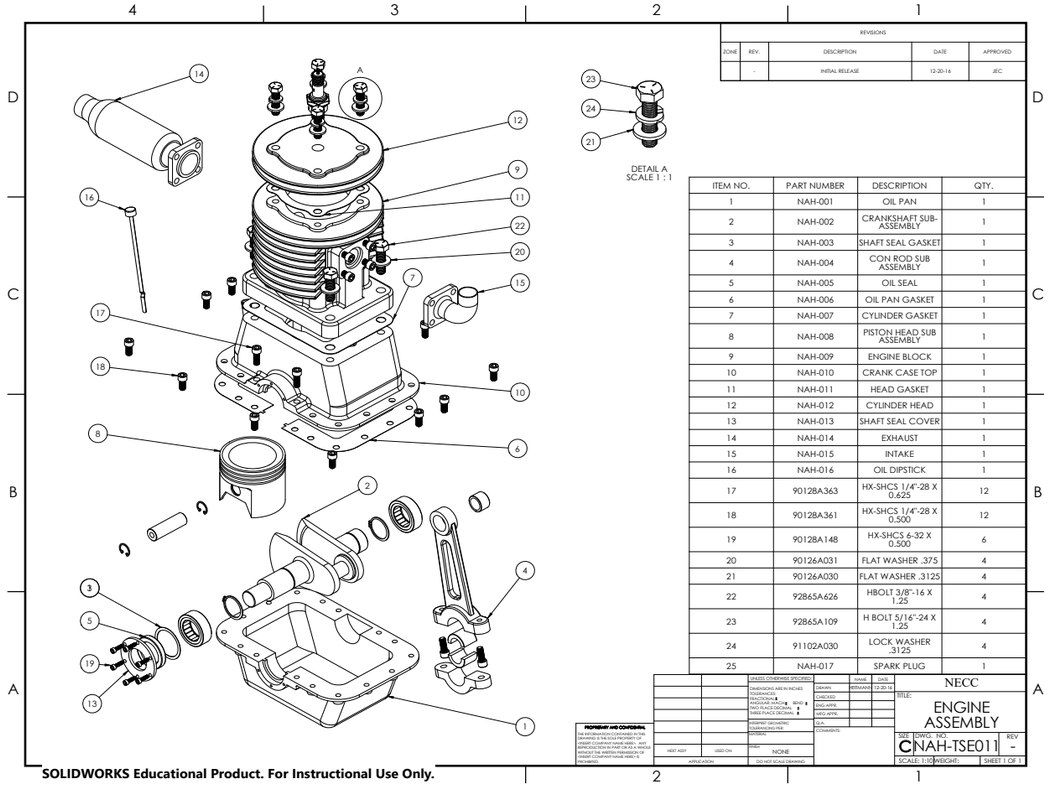

SOLIDWORKS Educational Product. For Instructional Use Only.